BREAKDOWN TR-2001

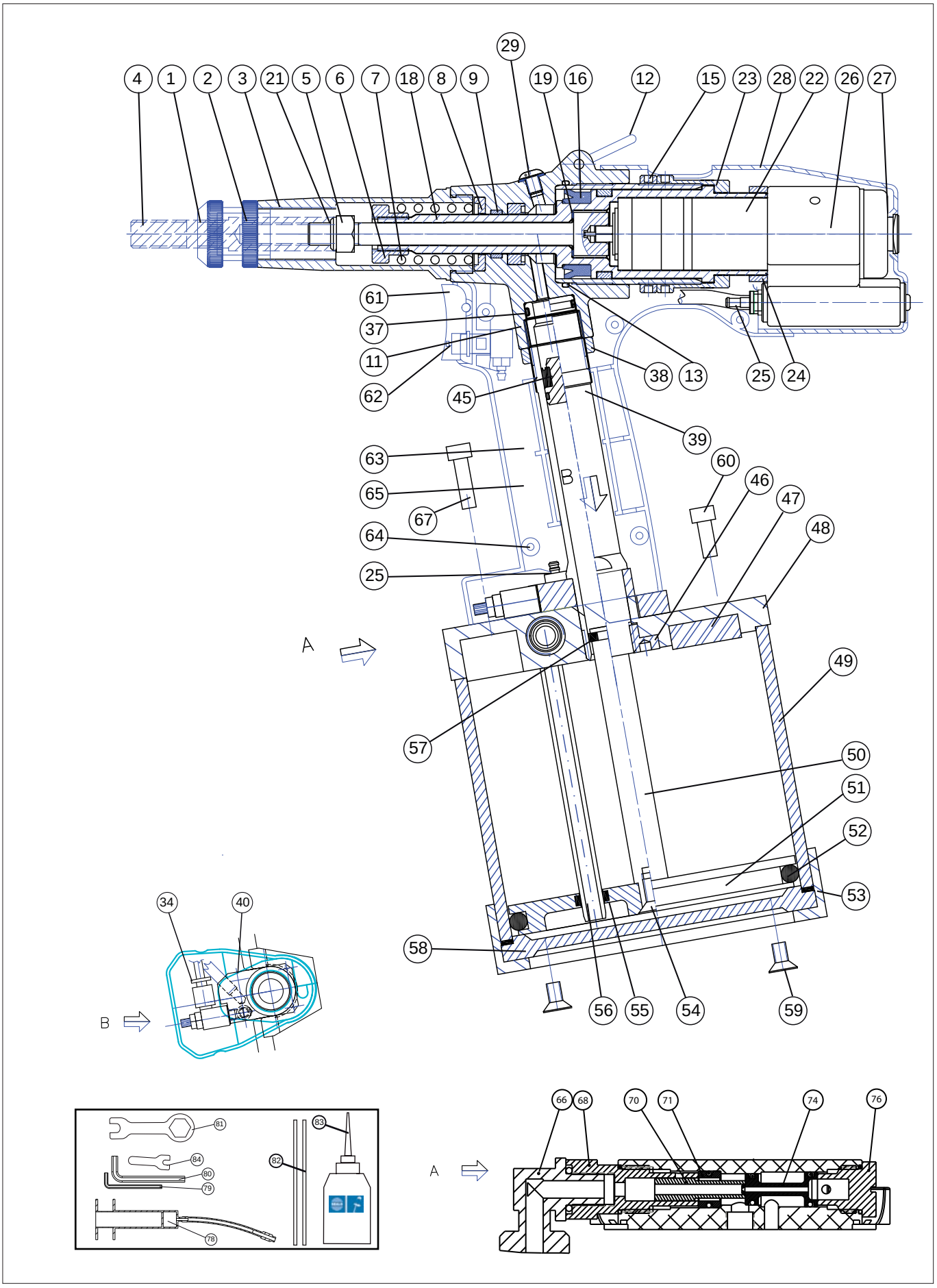

SPARE PARTS

N°	REFERENCE	DESCRIPTION
1	05TR0200034	NOSEPIECE M-8
2	05TR0200019	NOSEPIECE ADJUSTMENT LOCKNUT
3	05TR1001003	NOSEPIECE HOLDER
4	05TR1001067	MANDREL M-8
5	05TR1001005	MANDREL LOCKNUT
6	05TR1001006	FIXATION NUT SPRING
7	05TR1001007	SPRING
8	05TR1001008	SUPPORTING SPRING WASHER
9	05TR1001009	O-RING + PROTECTOR COLLAR
		COLLAR
		O-RING
11	05TR1001011	CYLINDER BODY
12	05BM0700014	HANGING RING
13	05TR1001013	CYLINDER + O-RING
		O-RING
		CYLINDER
15	05TR1001015	ADJUSTMENT LOCKNUT
16	05TR1001016	O-RING + COLLAR
		O-RING
		COLLAR
18	05TR1001018	MOTOR BODY
19	05TR1001019	PULLER + SPACERS
		SPACERS
		PULLER
22	05TR1001022	MOTOR UNIT
23	05TR1001023	STROKE ADJUSTMENT NUT
24	05TR1001024	NYLON STOP
25	05TR1001025	RACOR + TUBES
26	05TR1001027	GROUP DISTRIBUTOR
27	05TR1001028	WASHER GROUP
28	05TR1001029	GROUP DISTRIBUTOR HANDLE
29	05BM0000105	M5X10 COUNTERSUNK SCREW
34	05TR1001034	REGULATING VALVE + O-RING
37	05TR1001037	RACOR
38	05TR1001039	PISTON LOCKNUT
39	05TR1001040	PLEPNEUMATIC CYLINDER
40	05TR1001041	COLECTOR PLATE
45	05BM0000050	FLOATING PISTON +LIP SEAL + O-RING
46	05BM0000029	LOCK NUT CYLINDER-TOP (BRASS)
47	05BM0000089	RUBBER BUFFER BIG PISTON
48	05BM0000119	UP TOP
49	05BM0000004	CYLLINDER LINER

N°	REFERENCE	DESCRIPTION
50	05BM0000053	PISTON AXIS
51	05BM0000031	PISTON
52	05BM0000067	O-RING
53	05BM0000028	PORTECTION DOWN TOP
54	05BM0000104	M6X15 COUNTERSUNK ALLEN SCREW
55	05BM0000065	LIP SEAL
56	05BM0000048	AIR TUBE BRASS
57	05BM0000049	NYLON GUIDE
58	05BM0000008	DOWN TOP+O-RING
59	05BM0000094	SCREW M5X15 DOWN TOP (4 UNITS)
60	05BM0000092	SCREW M5X25 UP TO (2 UNITS)
61	05BM0700032	TRIGGER
62	05BM0000097	CONTROL-SWITCH
63	05TR1001063	LEFT HANDGRIP
64	05TR1001064	SCREW M3X13 (5 UNITS)
65	05TR1001065	RIGHT HANDGRIP
66	05BM0000099	ENTRY AIR
67	05BM0000092	SCRW M5X15 UP TO (2 UNITS)
68	05BM0000129	ENTRY AIR NUT + O-RING
70	05BM0000127	CLOSED AIR VALVE
71	05BM0000126	WASHER CLOSED VALVE + O-RINGS
74	05BM0000124	VALVE SPOOL + O-RINGS
76	05BM0000025	AIR NUT + O-RING
78	05BM0000101	GREASE GUN
79	05BM0000108	ALLEN KEY Nº3
80	05BM0000102	ALLEN KEY Nº4
81	05TR1001069	NOSEPIECE HOLDER AND MANDREL SPANNER
82	05TR1001068	PULLING ADJUSMENT RODS
83	05BM0000103	OIL
84	05TR1001070	DISMANTLE MANDREL KEY

BRALO
www.bralo.com
REMACHES - BLIND RIVETS - RIVETS - BLINDNIETE - RIVETTI - REBITES
TUERCAS REMACHABLES - INSERT NUTS - ECROUS À SERTIR - BLINDNIETMUTTERN - INSERTI - PORCAS A REBITAR